IMU3000

High Performance Tactical Grade Inertial Measurement Unit

Main Features

- High Precision 10 DoF MEMS Inertial Measurement Unit
- Range (Typical): Gyro ±500°/s, Accel ±40g
- Bias Instability (Allan) : Gyro: 0.6°/h, Accel 30μg
- Bias Repeatability: Gyro: 1.8° /h, Accel 60μg
- Full Temperature Range Accuracy Assured
- Interface: RS232, RS422, Output Rate up to 2000Hz
- Small Size & Light Weight: 39 × 45 × 22 mm, 50g
- Working Temperature: -40~+85°C

IMU3000 is a high performance tactical grade MEMS Inertial Measurement Unit, which MEMS gyroscope enjoys 0.6°/h (Allan) bias instability and MEMS accelerometer enjoys 40μg (Allan) bias instability, and it can output precise 3 axis outputs of angular rate, 3 axis acceleration data, 3 axis magnetometer data, and barometer data, etc.

IMU3000 adopts latest MEMS technology and advanced MEMS components, and IMU3000 has been produced in bulk, which reduces the cost deeply. IMU3000 enjoys excellent measurement performance, small size, light weight, and high reliability and robustness, it can output precise measurement data in harsh environment, and it has been widely applied in tactical unmanned aircraft, intelligent driving, surface vehicle, platform stabilization, industrial robotics, etc.

- ✓ **12-Step Quality Control, Super Reliability, Suitable for Applications in Harsh Environment**
- ✓ **Adopting Original Big Brand Component, High-class Material, Competitive Price**
- ✓ **Real Actual Precise with Strict Factory Calibration, Perfect Performance**
- ✓ **Successful Applications in Tens of Fields, More than 1000 Customers are Using**

Typical Applications

Unmanned Aircraft

Intelligent Driving

Unmanned Surface Vessel

Platform Stabilization

Copy Right Reserved © 2024 Nanjing Sky MEMS Technology co., ltd.

IMU3000

High Performance Tactical Grade Inertial Measurement Unit

Technical Specifications

Parameter	Test Condition	Min.	Typical	Max.	Unit
Gyroscopes					
Range①			±500		°/s
Bias Instability	Allan variance		0.6		°/h
	10s average(-40~+85°C, fixed temp.)		2		°/h
Bias Repeatability			1.8		°/h
Random Walk			0.15		°/√h
Bais	Bias change at full temp. range②(1 sigma)		±0.03		°/s
Non-linearity			100		ppm
Bandwidth			200		Hz
Accelerometers					
Range①			±40		g
Bias Instability	Allan variance		30	45	ug
	10s average(-40~+85°C, fixed temp.)		60		ug
Bias Repeatability			60		ug
Random Walk			0.01		m/s/√h
Non-linearity			100		ppm
Bandwidth			200		Hz
Magnetometer					
Dynamic Range		±2			Gauss
Resolution			120		uGauss
Noise RMS	10Hz		50		uGauss
Bandwidth			200		Hz
Interface(RS232, RS422)					
*Baud Rate*③			921600		bps
Output Rate			2000		Hz
Electrical Features					
Supply Voltage	3.6-36 V				
Power Consumption	0.3 W				
Environment Conditions					
Operating Temperature	-40°C ~ 85°C				
Storage Temperature	-55°C ~ 105°C				
Vibration Resistance	20-2000Hz, 6.06g				
Shock Resistance	1000g, 0.5ms				
Physical Parameter					
Size	39 × 45 × 22 mm				
Weight	50grams				
Connector	pigtail				

Note:
①: The range of Gyroscopes and Accelerometers can be configured in our factory.
②: The bias value is calculated based on the whole temperature change period, the temperature changing rate<=2°C/minute, temperature range:-40~+85°C;
③: The baud rate and output rate can be configured in our factory.

Copy Right Reserved © 2024 Nanjing Sky MEMS Technology co., ltd.
Focus on MEMS Measurement & Control Technologies, Products include:
MEMS Accelerometer MEMS Gyro Inclinometer E-compass
IMU Vertical Gyro AHRS GNSS/INS Fiber Optical Gyro

IMU3000

High Performance Tactical Grade Inertial Measurement Unit

Pins Definition

Pin Function Descriptions

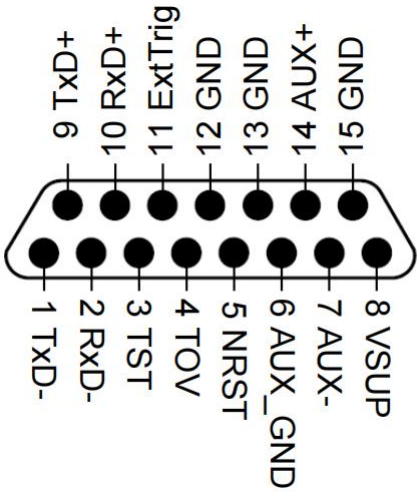

Pins No.	Name	Type	Description
8	Power	Power	Vin，5V~36V
15	GND	GND	GND
9	TX+	Output	RS422
1	TX-	Output	
10	RX+	Input	
2	RX-	Input	
13	RS232_TXD	Output	RS232, reserved
12	RS232_RXD	Input	
6	TXD	output	IMU TTL, reserved
7	RXD	input	
4	TOV	output	
11	ExtTrig	input	
3	BOOT	input	
5	RST	input	
14	NC	reserved	Reserved by factory

Copy Right Reserved © 2024 Nanjing Sky MEMS Technology co., ltd.
Focus on MEMS Measurement & Control Technologies, Products include:
MEMS Accelerometer MEMS Gyro Inclinometer E-compass
IMU Vertical Gyro AHRS GNSS/INS Fiber Optical Gyro

IMU3000

High Performance Tactical Grade Inertial Measurement Unit

Dimension

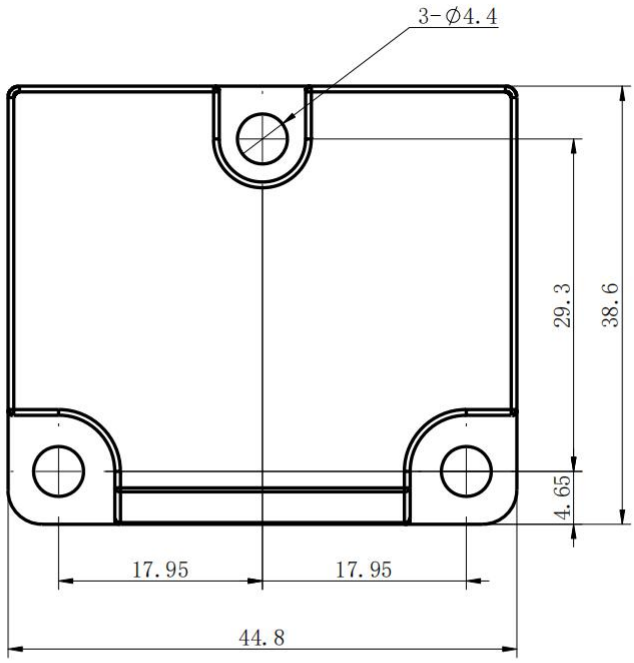

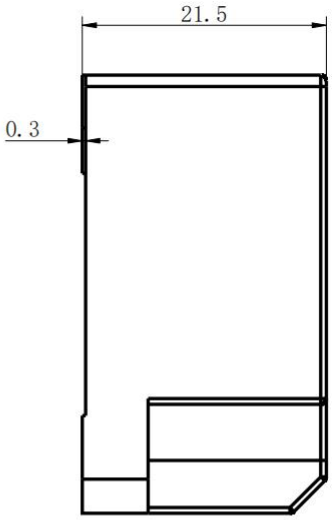

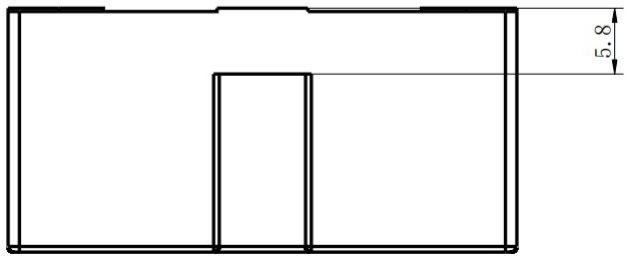

Copy Right Reserved © 2024 Nanjing Sky MEMS Technology co., ltd.
Focus on MEMS Measurement & Control Technologies, Products include:
MEMS Accelerometer MEMS Gyro Inclinometer E-compass
IMU Vertical Gyro AHRS GNSS/INS Fiber Optical Gyro

IMU3000

High Performance Tactical Grade Inertial Measurement Unit

Communication Protocol

Protocol	Byte No.	Data	Unit	Data Type	Remarks
Protocol head	0	0x5a			
	1	0x5a			
Protocol Body	2~5	message counter	/	int32	low byte first, high byte last
	6~9	X axis angular rate	°/s	float	
	10~13	Y axis angular rate	°/s	float	
	14~17	Z axis angular rate	°/s	float	
	18~21	X axis acceleration	g	float	
	22~25	Y axis acceleration	g	float	
	26~29	Z axis acceleration	g	float	
	30~33	X axis magnetometer	uT	float	
	34~37	Y axis magnetometer	uT	float	
	38~41	Z axis magnetometer	uT	float	
	42~45	pitch	°	float	
	46~49	roll	°	float	
	50~53	yaw	°	float	
	54~57	temp	℃	float	
Protocol end	58	Checksum			sum of 2-57byte, take the low byte

Copy Right Reserved © 2024 Nanjing Sky MEMS Technology co., ltd.
Focus on MEMS Measurement & Control Technologies, Products include:
MEMS Accelerometer MEMS Gyro Inclinometer E-compass
IMU Vertical Gyro AHRS GNSS/INS Fiber Optical Gyro

IMU3000

High Performance Tactical Grade Inertial Measurement Unit

Revision history

Data	Version	Changes
2025-9-1	V1.0	Initial release.

Copy Right Reserved © 2024 Nanjing Sky MEMS Technology co., ltd.
Focus on MEMS Measurement & Control Technologies, Products include:
MEMS Accelerometer MEMS Gyro Inclinometer E-compass
IMU Vertical Gyro AHRS GNSS/INS Fiber Optical Gyro